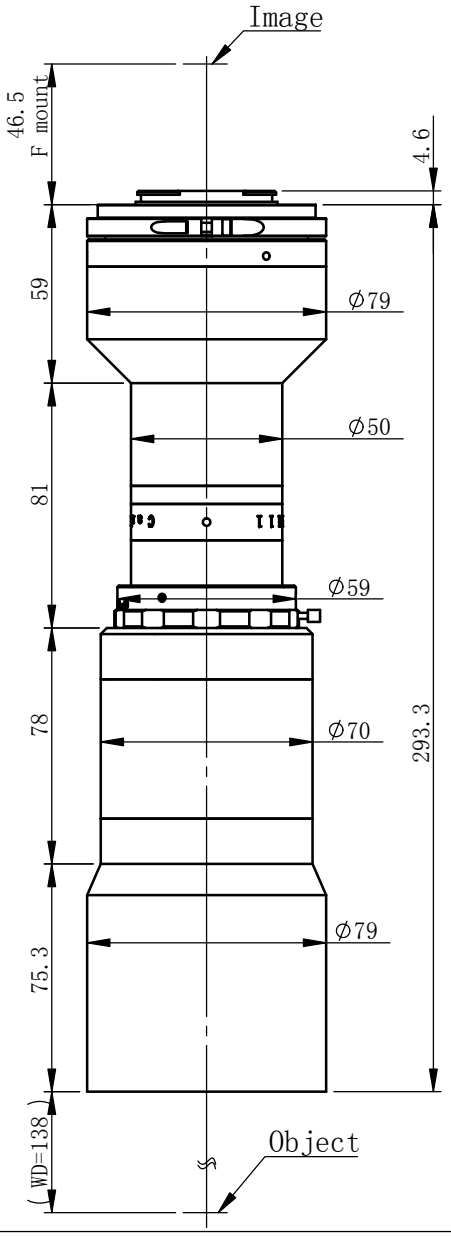

XF-PTL05535-F-VI

Specification

Optical structure	Bi-Telecentric
Magnification	0.658
Object field of view	Φ53.2mm
Image field of view	Φ35mm
Working Distance	138mm±3%
Telecentricity	<0.04°(0.06°)
Depth of field	1.9-12.0mm
F#	F7.5-F46.7
Resolution	7.50-46.82μm
MTF	>0.3@140-22lp/mm
Distortion	<0.011%(0.058%)
Detector type：	
2' 23×23	35.0×35.0mm
4/3' 18×13.5	27.4×20.5mm
1.1' 14.2×10.4	21.6×15.8mm
1' 12.8×9.6	19.5×14.6mm
2K Linear scan 2048×10μm	31.1mm
4K Linear scan 4096×7μm	43.6mm