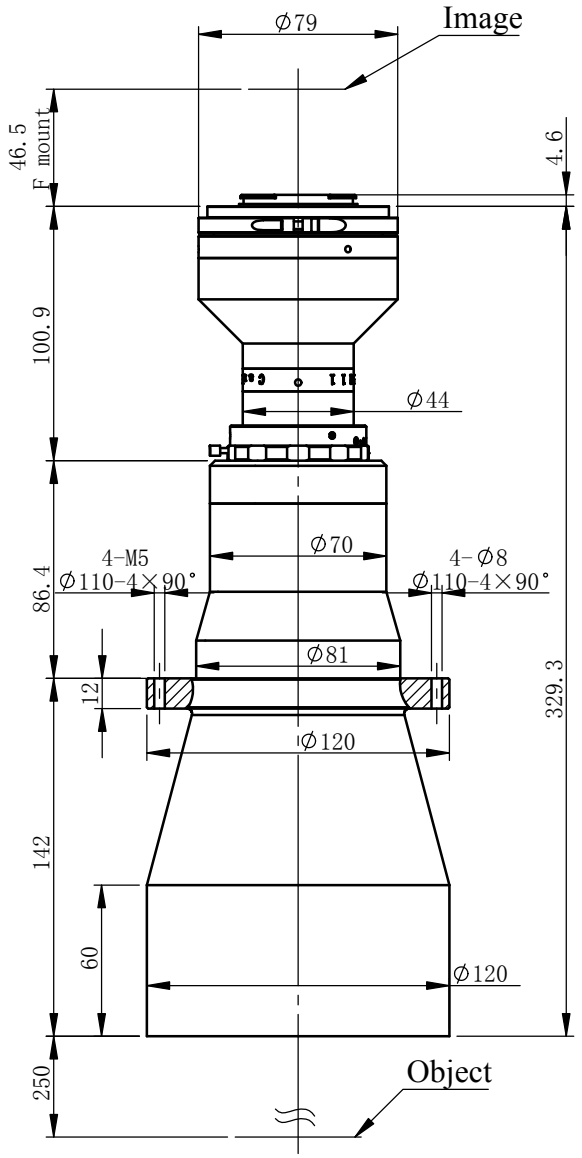

XF-PTL09229-F-VI

Specification

Optical structure	Bi-Telecentric
Magnification	0.317
Object field of view	Φ91.5mm
Image field of view	Φ29mm
Working Distance	250mm±3%
Telecentricity	<0.04°(0.06°)
Depth of field	7.6-41.1mm
F#	F7.0-F37.5
Resolution	14.6-78.0μm
MTF	>0.3@145-27lp/mm
Distortion	<0.041%(0.080%)
Detector type：	
7/4' 22.5×16.9	71.0×53.3mm
4/3' 18.0×13.5	56.8×42.6mm
1.1' 14.2×10.4	44.8×32.8mm
1' 12.8×9.6	40.4×30.3mm
2K Linear scan 2048×10μm	64.6mm
4K Linear scan 4096×7μm	90.4mm